Lotus LED Lights

LL4RRG - 27K

4" Round Regressed LED 14.5W Warm White

Type IC, Air-Tight, Wet & Plenum

Project:

Location:

Trim Finish: Qty:

Notes:

SPECIFICATION	
Applications	Recessed Ceiling Mount
Energy Used	14.5 W
Colour Temperature	2700 K
Light Output	850 lm
Halogen Equivalent	75 W
Beam Angle	92°
CRI	92
Input Voltage	120V AC 50/60 Hz
Power Factor	0.99
Dimming	TRIAC Dimmers 5% - 100%
Approved Location	Insulated Ceilings, Open Plenum, Wet
Air Tight	Yes
Ambient Temperature	-40°F (-40°C) to +104°F (+40°C)
Projected Life	70% Light Output at 50,000 Hours
Certification	cULus, Energy Star, T24
Warranty	**10 Year on Residential** **5 Year on Commercial Applications**

DESCRIPTION

Regressed LED fixtures with integral LEDs and built-in driver.
Commercial Grade Quality With Architectural Design.

FEATURES & BENEFITS

2" Thin - Fits In Tight Ceiling Spaces
CRI 92 - True Colour Rendering
Type IC Rated - No Housing Required
Open Plenum Rated - Suitable For Commercial Installations
Fast & Easy To Install - Save On Labour
Junction Box Included - No Additional Hardware Needed

MOUNTING

Cut Hole In Ceiling And Snap Fixture In Opening With Attached Spring Clips.
2" Above Ceiling Clearance Required. Quick connectors Included.

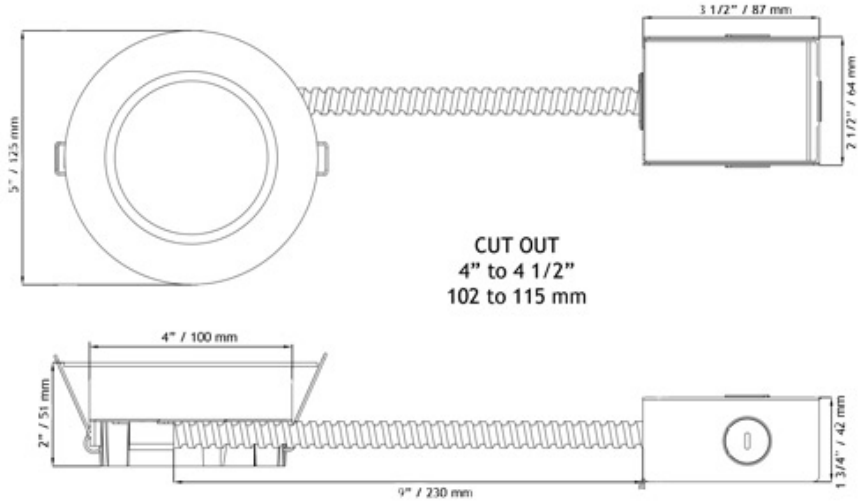

Available Trims:

White

Black

COMPLIANCE

c UL us LISTED E479890 · ENERGY STAR · TITLE 24 COMPLIANT · LED lighting facts · FC · RoHS compliant

Lotus LED Lights

Warehouses

Vancouver Toronto Las Vegas Naples Philadelphia Dallas Seattle Chicago Denver

tel: **1-844-24-LOTUS (56887)** fax. 1-877-561-6306 www.**lotusLEDlights**.com

CHARACTERISTICS

Body: Durable, Die Cast Aluminum Alloy for Optimal Heat Dissipation.

Paint: Oil Based Spray Painted - Scratch Resistant And Smooth Finish.

LEDs: 48 Pieces Of Custom Packaged LM80 Epistar 2835. Guaranteed 98% Lumen Maintenance After 6,000 Hours.
Strict Binning To Ensure Consistent Light Colour. CRI 92 for True and Vibrant Colour Rendering.

Driver: 5th Generation Lotus Designed.

Junction Box: Included, Connected To The Fixture By 9" Armored Plenum Rated Cable. Quick Connectors Included For Additional Time Saving.

Testing: Every LED Is Visually Checked Before And After The PCB Is Mounted On The Fixture.
Every Fixture Is Powered For Minimum 24 Hours Before Packaging. No Random Tests – We Examine All Fixtures.

PHOTOMETRIC DATA

MODEL:	LL4RRG-27K	LAMP FLUX:	855 LM
VOLTAGE:	120 V	LUMENS / POWER:	61.5 LM/W
POWER:	13.89 W	CENTRAL INTENSITY:	408 CD
PF:	0.987	BEAM ANGLE:	92 DEGREES

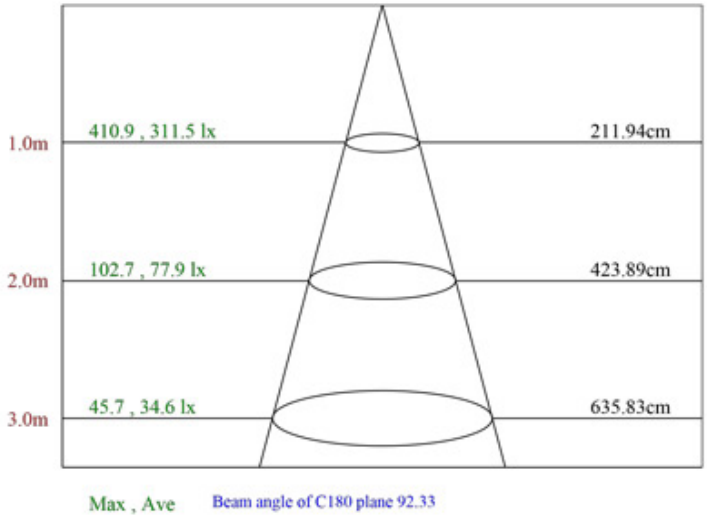

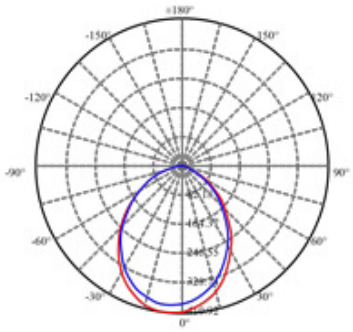

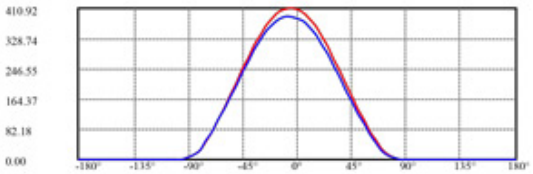

ORDERING GUIDE

Example: **LL4RRG - 27K - WH**

LL4RRG - 27K - Trim Finish

WH : White
BK : Black

ACCESSORIES

Flat Rough-In Plates - cat # **RIP4**

Flanged Rough-In Plates - cat # **LRP4**

Goof Ring OD 5 3/4" - White cat # **GR4**, Black cat # **GR4-BK**

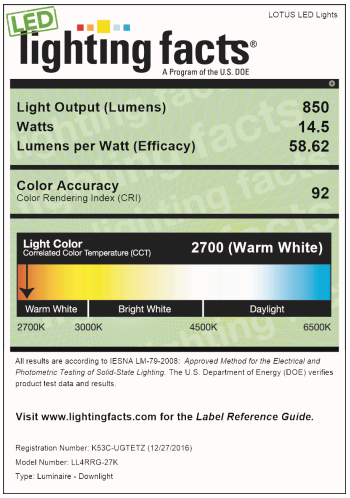

Lotus LED Lights

Warehouses

Vancouver Toronto Las Vegas Naples Philadelphia Dallas Seattle Chicago Denver

tel: **1-844-24-LOTUS (56887)** fax. 1-877-561-6306 www.**lotusLEDlights**.com