LY6RCS / 41K

6" Round Super Thin Recessed LED Neutral White 12W

Type IC, Wet & Air-Tight

Project:

Location:

Trim Finish: Qty:

Notes:

SPECIFICATION	
Applications	Recessed Ceiling Mount
Energy Used	12 W
Colour Temperature	4100 K
Light Output	800 lm
Halogen Equivalent	65 W
Beam Angle	110°
CRI	80 +
Driver Input	120V AC or 277V-347V
Power Factor	0.98
Dimming	TRIAC Dimmers 10% - 100%
Approved Location	Insulated Ceiling & Damp Locations
IP Rating	IP 54
Air Tight	Yes
Ambient Temperature	-40°F (-40°C) to +104°F (+40°C)
Projected Life	70% Light Output at 50,000 Hours
Certification	cULus, Energy Star
Warranty	**10 Year on Residential** **5 Year on Commercial Applications**

DESCRIPTION

6" Recessed Round LED With Integral Driver In Connection Box.
Fits Where No Other Recessed Fixture Can.

FEATURES & BENEFITS

1/2" Thin - Install Directly Under Joists, Maximum Layout Flexibility
Type IC Rated - No Housing Required
Fast & Easy To Install - Save On Labour
Driver Inside Connection Box - No Junction Box Needed

MOUNTING

Cut Hole In Ceiling And Snap Fixture In Opening With Attached Spring Clips.
1 1/2" Above Ceiling Clearance Required For Driver.

DIMENSIONS ID 6 1/8" OD 6 3/4" Cut Out 6 1/4" to 6 1/2"

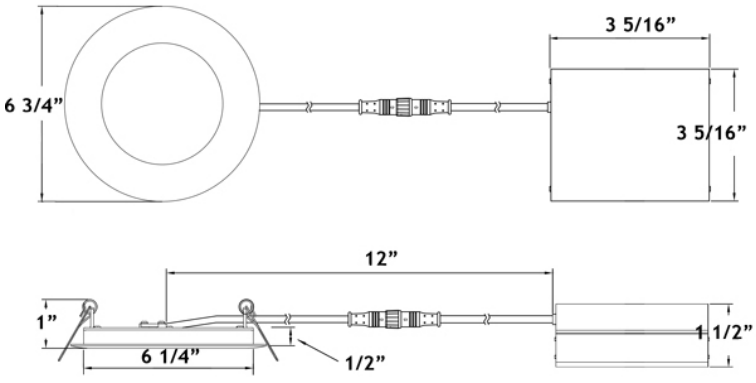

Driver Included

Cable Rating FT4 / CM

Trim Options

White Black Brushed Nickel

COMPLIANCE

c UL us LISTED E479890

ENERGY STAR

lighting facts

WET LOCATION

CHARACTERISTICS

Body: Durable, Die Cast Aluminum Alloy for Optimal Heat Dissipation.

Paint: Oil Based Spray Painted - Scratch Resistant And Smooth Finish.

LEDs: 77 Pieces Of Custom Packaged LM80 Epistar 3014.

Guaranteed 98% Lumen Maintenance After 6,000 Hours.

Strict Binning To Ensure Consistent Light Colour.

Driver: 4th Generation Lotus Designed. Field Proven Since 2011.

Connection Box: Patented Invention By Lotus LED Lights.

Saves Contractors Labour On Installation.

Testing: Every Single Driver Is Powered For Minimum 24 Hours Together With The Fixture That It Is Shipped With. No Random Tests.

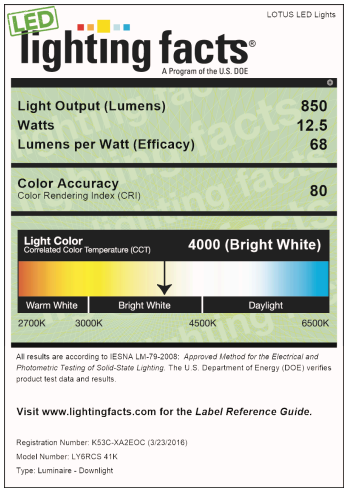

PHOTOMETRIC DATA

Test:U:120.0V I:0.1049A P:12.41W PF:0.9857 Lamp Flux:865.458x1 lm — Eff: 69.74 lm/W

MODEL	LY6RCS 41K	Imax(cd)	306.7	S/MH(C0/180)	1.29
NOMINAL POWER(W)	0	LOR(%)	100.0	S/MH(C90/270)	1.28
RATED VOLTAGE(V)	120	TOTAL FLUX(lm)	865.46	η UP,DN(C0-180)	0.0,50.2
NOMINAL FLUX(lm)	865.458	CIE CLASS	DIRECT	η UP,DN(C180-360)	0.0,49.8
LAMPS INSIDE	1	η up(%)	0.0	CIBSE SHR NOM	1.25
TEST VOLTAGE(V)	120	η down(%)	100.0	CIBSE SHR MAX	1.35

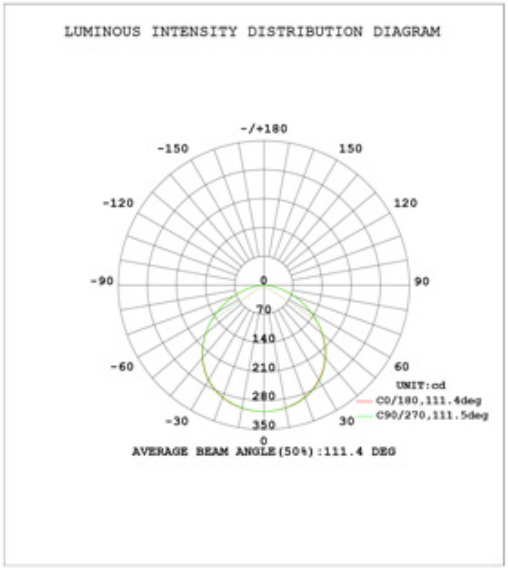

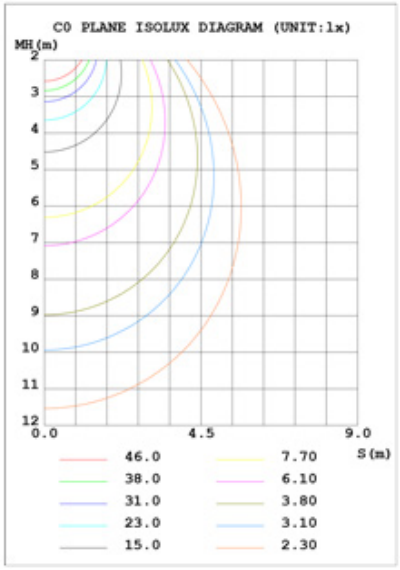

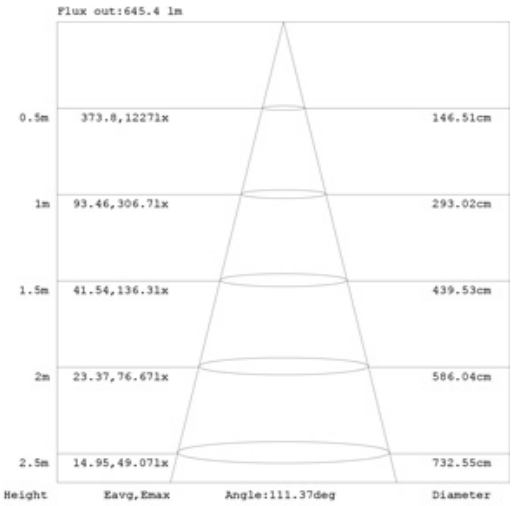

Intertek

ORDERING GUIDE

Example: **LY6RCS / 41K / WH**

LY6RCS / 41K / Trim Finish

WH : White
BK : Black
BN : Brushed Nickel

Order 277V - 347V Optional Driver Separately As cat # LLL-LD1535H

ACCESSORIES

Low Volage Extension Cables
6ft - cat # **EXC6**, 20ft - cat # **EXC20**
Max 40 ft Allowed. FT4 / CM rated

Flat Rough-In Plates - cat # **RIP6**

Flanged Rough-In Plate - cat # **LRP6**

Goof Ring OD 7 5/8". White only

Lotus LED Lights

Warehouses

Vancouver Toronto Las Vegas Naples Philadelphia Dallas Seattle Chicago Denver

tel: **1-844-24-LOTUS (56887)** fax. 1-877-561-6306 www.**lotusLEDlights**.com